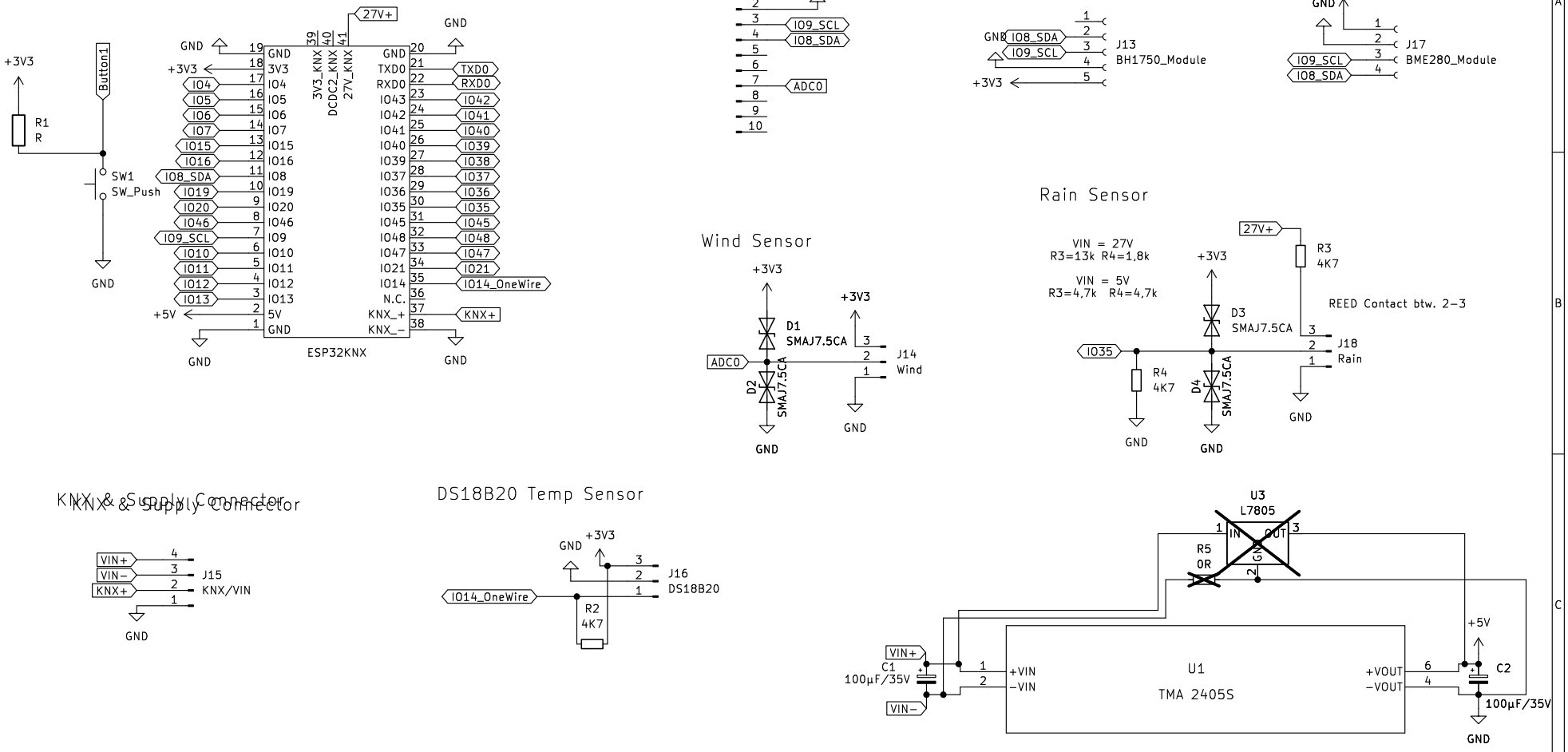

www.rohrhofer.org

Sheet: /

File: ESP32_Weatherstation_KiCAD9.kicad_sch

Title: ESP32–KNX Weatherstation

Size: A4	Date: 2026-01-28	**Rev: 02**
KiCad E.D.A. 9.0.0		Id: 1/1